BASIC SETUP OF EL460, PE460 & MP466

CABLE CONNECTION:
REMOVE PLASTIC CAP (TORX 6)
PLUG IN CABLE & REPLACE CAP
& SCREW

REMOVE THE ANTI MANIPULATION COVER
(REPLACE COVER AFTER STEP 4*)

FAIL LOCKED TO FAIL UNLOCKED:
(ON REAR OF LOCK)
SCREW IN RH HOLE = FAIL LOCKED
SCREW IN LH HOLE = FAIL UNLOCKED

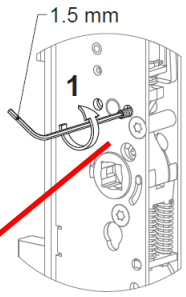

CHANGING THE CONTROLLED SIDE
(FREE EGRESS FROM SIDE WITH SCREW)

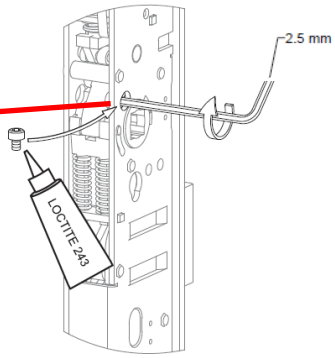

*MAKE SURE ANTI MANIPULATION COVER IS REFITTED PRIOR TO THIS STEP'
FOLLOWER REDUCERS MUST BE FITTED TO BOTH SIDES OF THE LOCK:
ENSURE DIMPLES ALIGN WITH THE DOTS ON FOLLOWER (IF PRESENT)

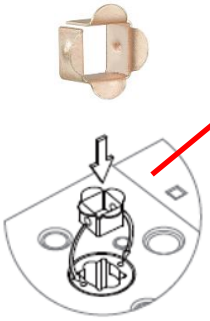

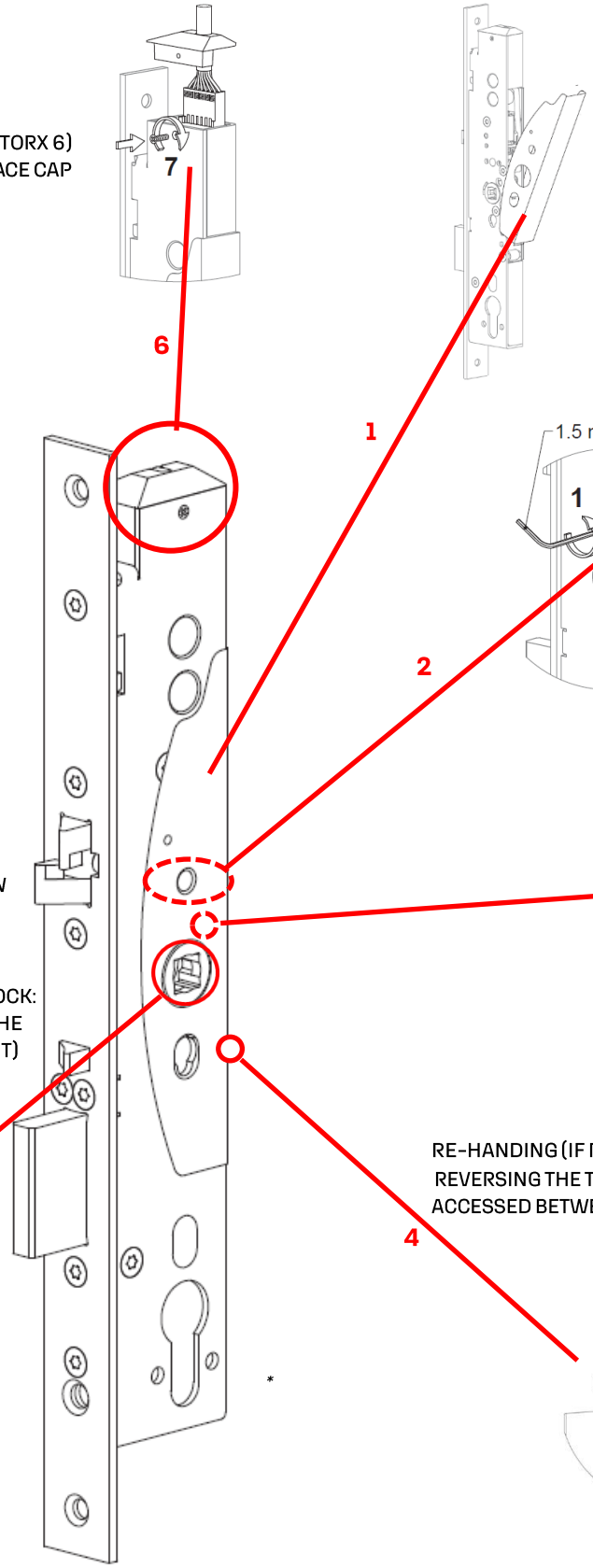

RE-HANDING (IF REQUIRED) or
REVERSING THE TRIGGER BOLT
ACCESSED BETWEEN 2 SPRINGS ON REAR OF LOCK

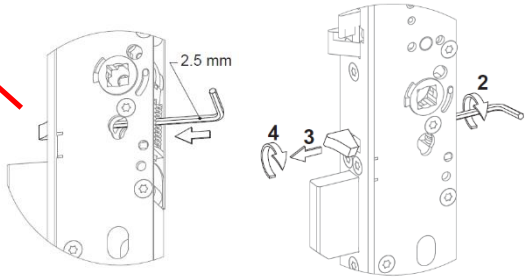

Abloy UK | School Street | Willenhall West Midlands | WV13 3PW
Phone: +44 (0) 1902 364500 | Fax: +44 (0) 1902 364501 | Email: sales@abloy.co.uk
www.abloy.co.uk